Maximal flexibility in minimum space

The increasing demand for maximal production consolidation with flexible availability of machine capacity at the same time was fully borne in mind while developing the DESMA 968.100 ZOE. This vertical machine with 1,000 kN clamping force could be largely composed by means of standard units from the modular DESMA component system - in a surprisingly compact design.

Image 1: *Very space-saving machine assembly possible*

In the project planning stage it was already crucial to develop a machine layout which can be put together very closely to reduce the ways to go by the operator or the travels for automation systems to a minimum. The machines can be assembled with a center distance of axes of 2,000 mm, but provide a free passage of around 800 mm.

Image 2: *A minimum center distance but provide a free passage*

The clamping unit including injection unit and the hydraulics including control cabinet are collected on an ultra-compact substructure which has lateral shoes for a fork-lift truck. Thus, relocating the complete machine is possible within a short time.

The advantage of this variant is that production cells can flexibly be combined within a very short time. So especially in times of fluctuating market demand, production facilities can be quickly tailored to the current order situation.

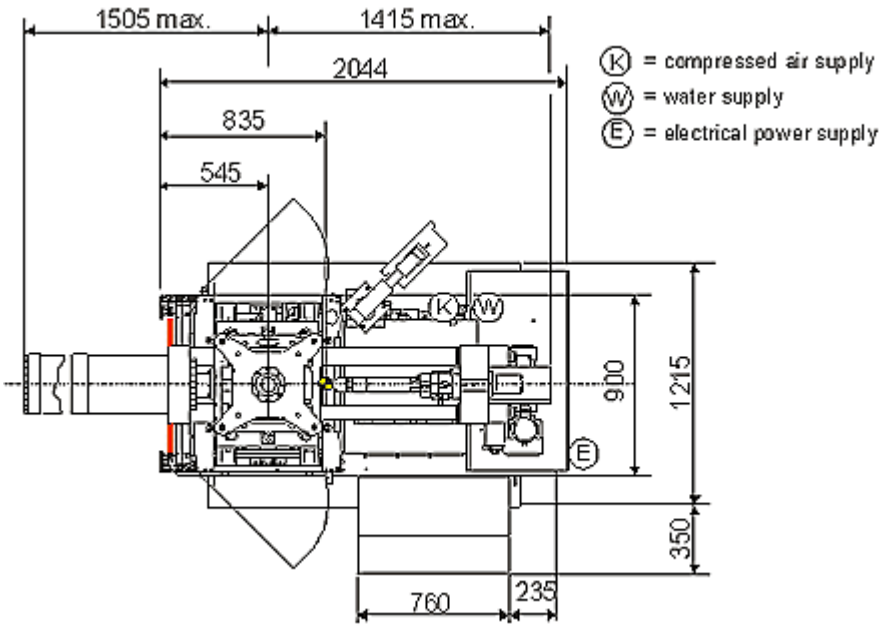

Image3: *Installation plan top view with dimensioning*

Due to the modular DESMA component system almost all possibilities of combination for the different types of available injection units are given. In this case the patented FIFO A injection system with well accessible material intake and integrated retractable nozzle were used. Depending on the client's requirement the variants DESMA FIFO B (vertical model with retractable nozzle) or the DESMA FIFO C (with fixed-lying nozzle) can be installed. It goes without saying that all high-pressure variants (3,000 - 3,500 injection pressure) are also available.

If required, demoulding tables (heating platen with mould lower part can be moved out of the mould carrier) can be integrated.

This machine as well can be delivered with both types of control systems DRC 1210 and DRC 2010 with intuitive touch user surface.

Image4: *Control systems DRC 1210 and DRC 2010*

A larger quantity has recently been delivered to an American major customer who uses the machines for the production of rubber-to-metal bonded parts in the automotive industry.